KONTI X

i-series

CHANNEL BALING PRESS IN LARGE FORMAT
WITH CROSSWISE WIRE TYING

KĀDANT

PAAL®

Technical data and measurements

KONTI X i		500				600				700			
pressing force	t (kN)	122 (1.197)				158 (1.546)				198 (1.940)			
spec. pressing force	N/cm²	99				128				160			
tunnel cross section	cm	110 x 110				110 x 110				110 x 110			
hopper opening	cm	200 x 102				200 x 102				200 x 102			
feeding volume	ca. m^3	3,45				3,45				3,45			
number of wires	pieces	5				5				5			
driving power	kW	45	55	2x 45	2x 55	2x 37	2x 45	2x 55	3x 55	2x 45	2x 55	3x 55	4x 55
press output (ideal)	max. m³/h	430	650	780	1135	630	630	930	1265	520	775	1070	1320
press output (under load)	max. m³/h	290	395	540	710	395	430	580	805	355	480	675	850
press capacity (weight) (in relation to bulk weight)													
• 35 kg/m^3 e.g. flattened OCC	ca. t/h	10	14	19	25	14	15	20	28	12	17	23,5	29,5
• 60 kg/m^3 e.g. mixed paper	ca. t/h	17	23	30,5	39,5	23	25	33	45,5	20,5	27,5	38,5	48,5
• 100 kg/m^3 e.g. newspaper, magazines	ca. t/h	25	32,5	43	53,5	34	37,5	48	64,5	31,5	41,5	57,5	71
baler weight (according to equipment)	ca. t	40				42				44			

Dimensions in mm	A	B	C	D	E	G	H	I	K	M	N	P	Q1	Q2	R
KONTI X 500 i	12950	2660	5640	2000	5437	6437	6513	3290	605	4160	1020	1100	1615	1370	3388
KONTI X 600 i	13450	2710	5640	2000	5937	6937	6513	3290	605	4160	1020	1100	1615	1370	3388
KONTI X 700 i	14200	2810	5640	2000	6637	7637	6563	3290	605	4160	1020	1100	1615	1370	3388

Special FEATURES of the new KONTI i:

Higher throughput and bale weights combined with less energy consumption by:

- new optimized knife-, stamper- and channel-design
- modern axial piston pumps with low drive power
- using new positional ram measurement system

Increased life because of interchangeable bolted wear plates at press chamber walls and ram cover

High reliability through the new wire pusher and the new massive twister hooks

Easier maintenance and operation by:

- improved app-oriented operator interface and PLC with remote maintenance option
- improved access to tying unit via ladder to three sided platform

Latest state of the art according to the 2013 published European C standard for horizontal balers (EN 16252)

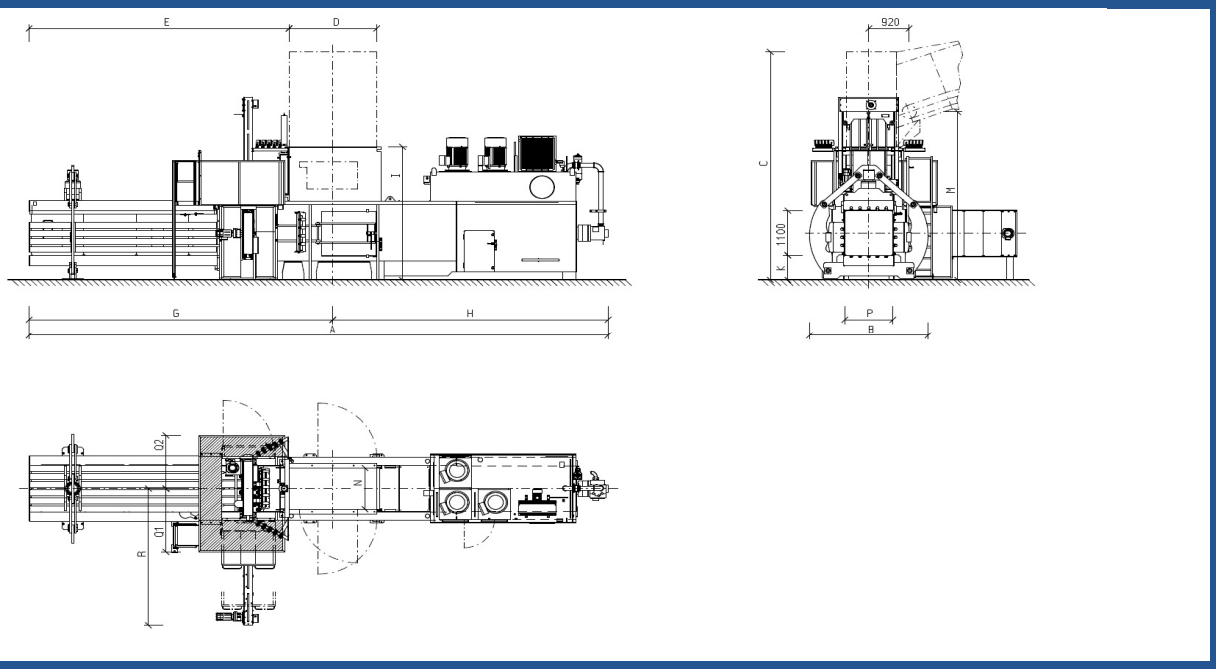

www.kadantpaal.com