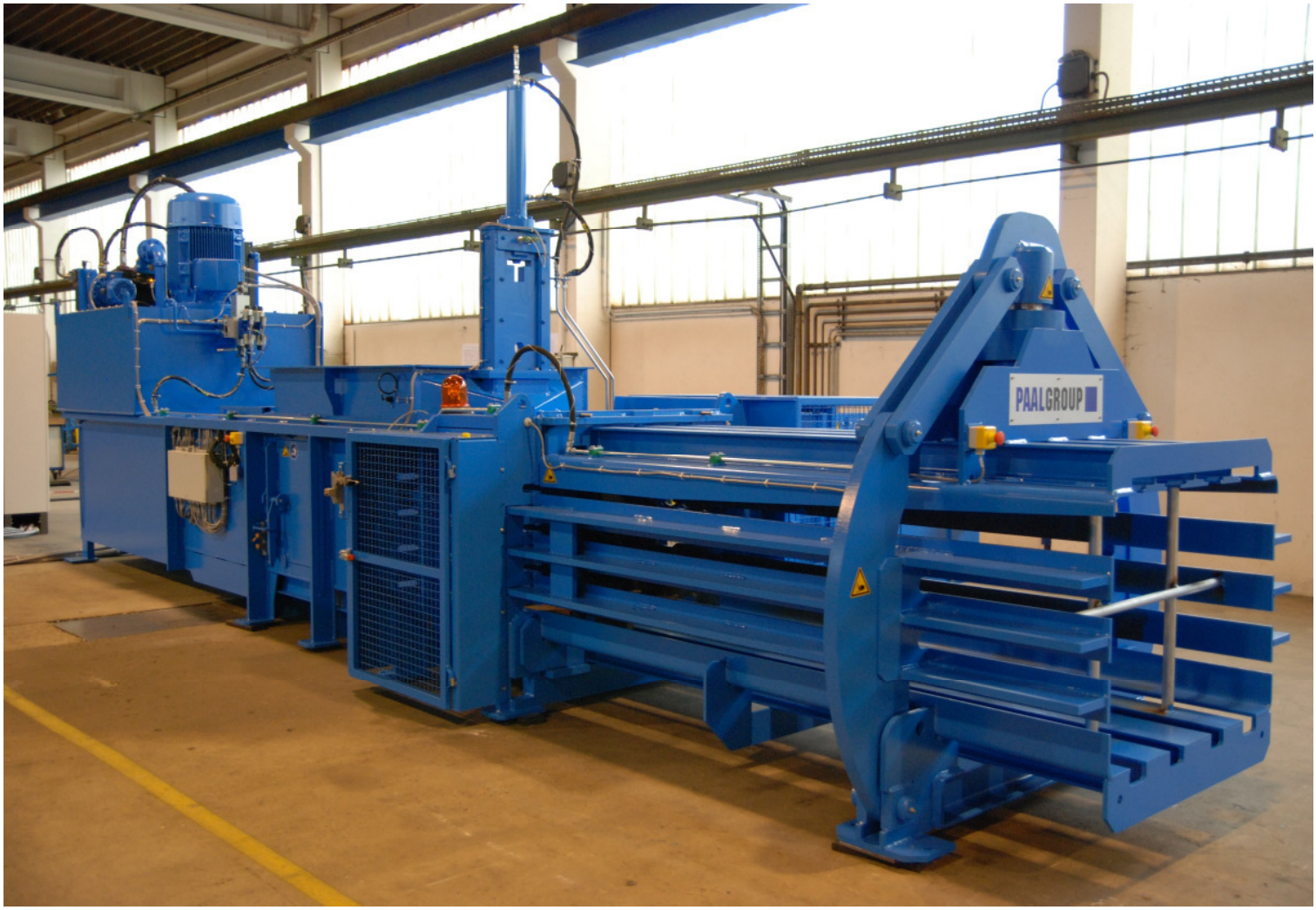

PACOMAT III-D

NEW

CHANNEL BALING PRESS
WITH HORIZONTAL WIRE TYING SYSTEM

KĀDANT

PAAL®

Technical data and measurements

PACOMAT		III-50 D				III-65 D						III-80 D							
pressing force	t (kN)	50 (486)				65 (633)						82 (802)							
spec. pressing force	N/cm²	59				77						97							
tunnel cross section	cm	75 x 110				75 x 110						75 x 110							
hopper opening	cm	125 x 102				145 x 102						160 x 102							
feeding volume	ca. m^3	1,55				1,75						1,85							
number of wires	pieces	4				4						4							
driving power	kW	15	22	37	45	15	22	37	45	55	75	15	22	37	45	55	75	2*37	2*45
press output (ideal)	max. m³/h	422	422	617	617	339	339	505	505	742	675	275	275	416	416	624	624	741	741
press output (under load)	max. m³/h	145	180	275	300	125	155	235	260	335	380	105	130	205	225	295	335	365	395
press capacity (weight) (in relation to bulk weight)																			
• 35 kg/m^3 e.g. flattened OCC	ca. t/h	5,1	6,3	9,6	10,5	4,4	5,4	8,2	9,1	11,7	13,3	3,7	4,6	7,2	7,9	10,3	11,7	12,8	13,8
• 50 kg/m^3 e.g. mixed paper	ca. t/h	6,9	8,6	12,8	14,0	5,9	7,3	11,1	12,2	15,6	17,7	5,1	6,3	9,8	10,8	14,0	16,1	17,3	18,7
baler weight (according to equipment)	ca. t	12				13						17							

Dimensions in mm	A	B	D	E	G	H	I	K	L	N	P	R
PACOMAT III-50 D	8172	2030	1250	3475	4100	4072	1475	310	750	1020	1100	3445
PACOMAT III-65 D	8826	2030	1450	3720	4445	4381	1475	310	750	1020	1100	3445
PACOMAT III-80 D	9410	2044	1600	3870	4670	4740	1515	350	750	1020	1100	3445

Additional FEATURES of the new PACOMAT D:

Higher throughput and bale weights combined with less energy consumption by:

- new optimized knife-, stamper- and channel-design
- modern axial piston pumps with low drive power
- New DENSITRONIC control system for tunnel adjustment provides for better response to various material grades.
- Modulare feeding concept
- The new Touch Panel TP 700 facilitates the operation of the machine through recipe management and a comprehensive display of data.

Latest state of the art according to the 2013 published European C standard for horizontal balers (EN 16252)

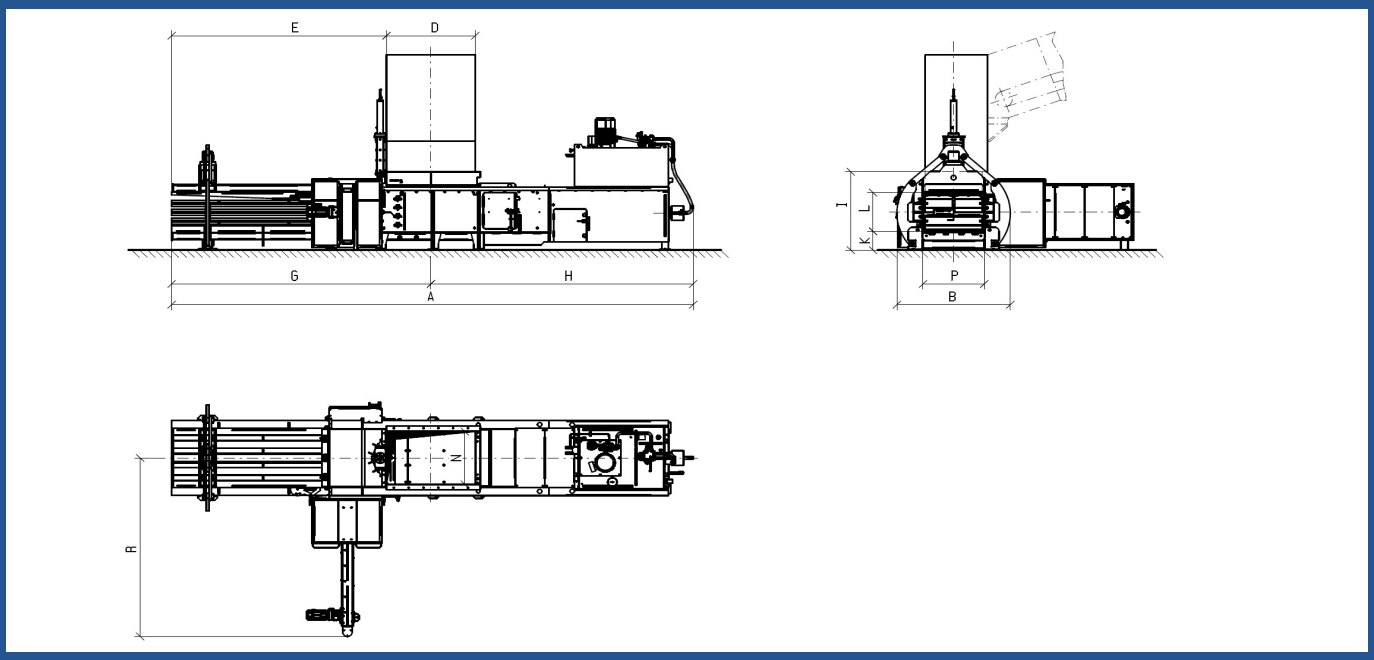

www.kadantpaal.com

Stand 12/16

PACOMAT V-D

NEW

CHANNEL BALING PRESS
WITH VERTICAL WIRE TYING SYSTEM

KĀDANT

PAAL®

Technical data and measurements

PACOMAT		V-50 D				V-65 D						V-80 D							
pressing force	t (kN)	50 (486)				65 (633)						82 (802)							
spec. pressing force	N/cm²	59				77						97							
tunnel cross section	cm	75 x 110				75 x 110						75 x 110							
hopper opening	cm	125 x 102				145 x 102						160 x 102							
feeding volume	ca. m^3	1,55				1,75						1,85							
number of wires	pieces	4				4						4							
driving power	kW	15	22	37	45	15	22	37	45	55	75	15	22	37	45	55	75	2*37	2*45
press output (ideal)	max. m³/h	422	422	617	617	339	339	505	505	742	675	275	275	416	416	624	624	741	741
press output (under load)	max. m³/h	145	180	275	300	125	155	235	260	335	380	105	130	205	225	295	335	365	395
press capacity (weight) (in relation to bulk weight)																			
• 35 kg/m^3 e.g. flattened OCC	ca. t/h	5,1	6,3	9,6	10,5	4,4	5,4	8,2	9,1	11,7	13,3	3,7	4,6	7,2	7,9	10,3	11,7	12,8	13,8
• 50 kg/m^3 e.g. mixed paper	ca. t/h	6,9	8,6	12,8	14,0	5,9	7,3	11,1	12,2	15,6	17,7	5,1	6,3	9,8	10,8	14,0	16,1	17,3	18,7
baler weight (according to equipment)	ca. t	12				13						17							

Dimensions in mm	A	B	D	E	G	H	I	K	L	N	P
PACOMAT V-50 D	8212	1915	1250	3475	4100	4112	1515	350	750	1020	1100
PACOMAT V-65 D	8866	1915	1450	3720	4445	4421	1515	350	750	1020	1100
PACOMAT V-80 D	9450	1915	1600	3870	4670	4780	1555	390	750	1020	1100

Additional FEATURES of the new PACOMAT D:

Higher throughput and bale weights combined with less energy consumption by:

- new optimized knife-, stamper- and channel-design
- modern axial piston pumps with low drive power
- New DENSITRONIC control system for tunnel adjustment provides for better response to various material grades.
- Modulare feeding concept
- The new Touch Panel TP 700 facilitates the operation of the machine through recipe management and a comprehensive display of data.

Latest state of the art according to the 2013 published European C standard for horizontal balers (EN 16252)

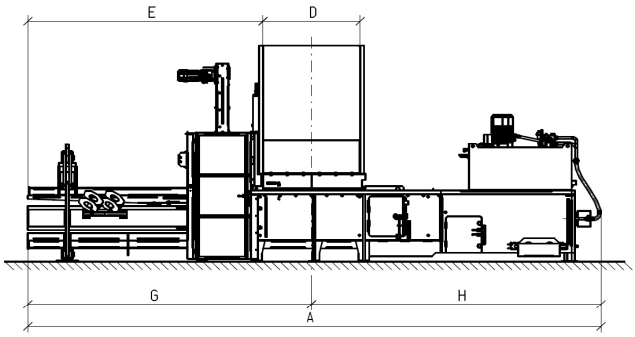

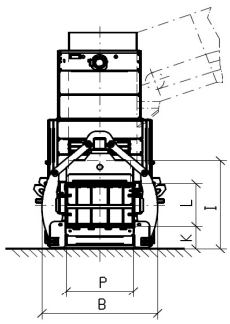

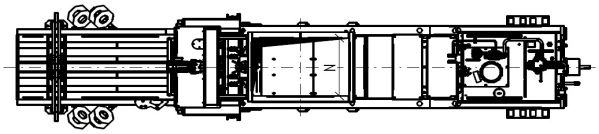

www.kadantpaal.com