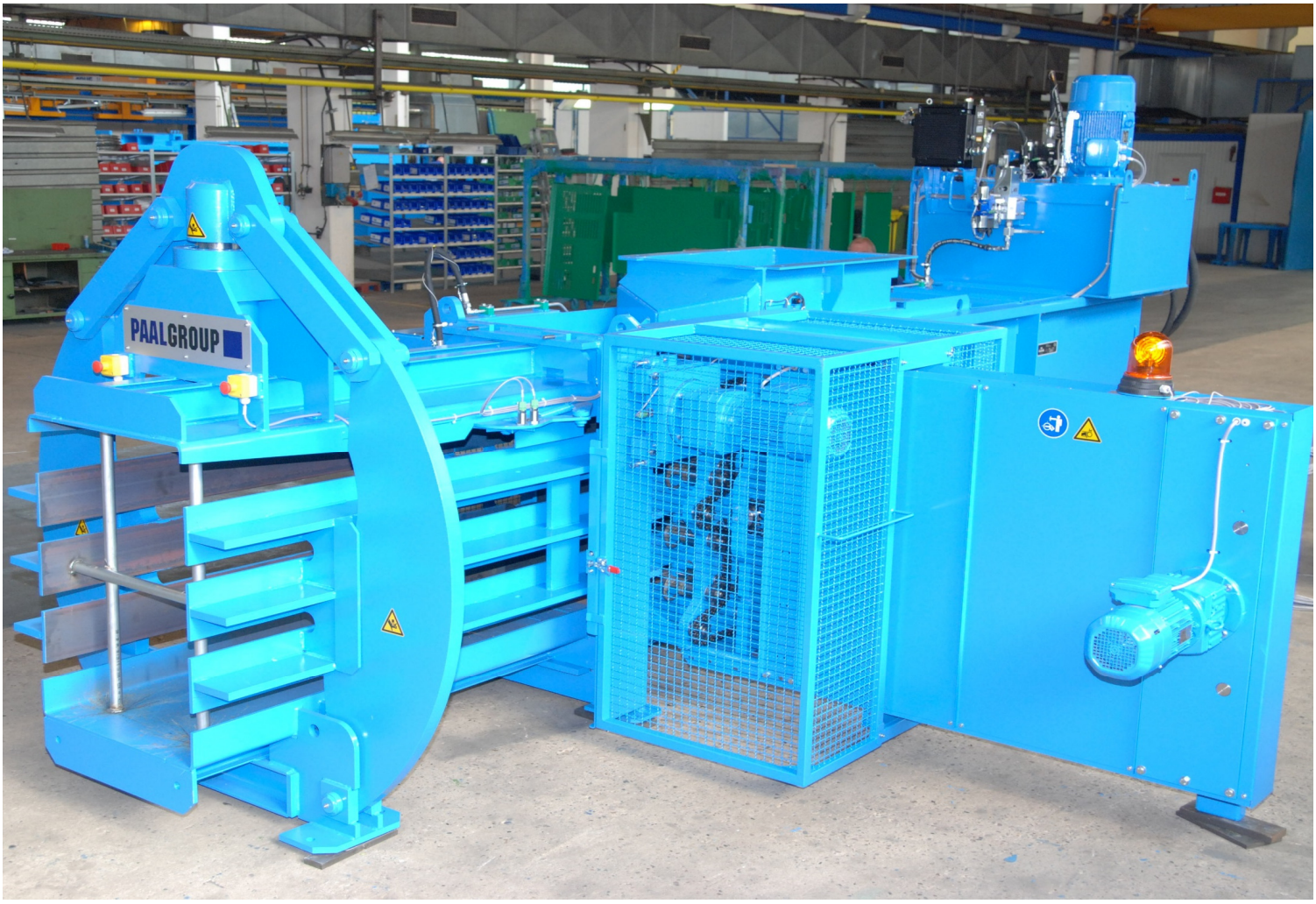

PACOMAT II-D

CHANNEL BALING PRESS
WITH HORIZONTAL WIRE TYING SYSTEM

NEW

KĀDANT

PAAL®

Technical data and measurements

PACOMAT		II-35 D		II-50 D				II-65 D		
pressing force	t (kN)	36 (356)		50 (486)				65 (633)		
spec. pressing force	N/cm²	51		69				90		
tunnel cross section	cm	100 x 70		100 x 70				100 x 70		
hopper opening	cm	105 x 62		105 x 62				105 x 62		
feeding volume	ca. m^3	0,9		0,9				0,9		
number of wires	pieces	4		4				4		
driving power	kW	15	22	15	22	37	45	22	37	45
press output (ideal)	max. m³/h	450	450	352	352	509	509	280	413	413
press output (under load)	max. m³/h	145	183	116	146	221	243	115	178	196
press capacity (weight) (in relation to bulk weight)										
• 35 kg/m^3 e.g. flattened OCC	ca. t/h	5,1	6,4	4,1	5,1	7,7	8,5	4,0	6,2	6,9
• 50 kg/m^3 e.g. shredded paper	ca. t/h	7,2	8,9	5,6	7,0	10,6	11,6	5,6	8,5	9,4
baler weight (according to equipment)	ca. t	8		8,5				9		

Dimensions in mm	A	B	D	E	G	H	I	K	L	N	P	R
PACOMAT II-35 D	7251	1707	1050	2865	3390	3861	1725	310	1000	620	700	2892
PACOMAT II-50 D	7215	1967	1050	2865	3390	3825	1725	310	1000	620	700	2892
PACOMAT II-65 D	7825	1967	1050	3315	3840	3985	1725	310	1000	620	700	2892

Additional FEATURES of the new PACOMAT D:

Higher throughput and bale weights combined with less energy consumption by:

- new optimized knife-, stamper- and channel-design
- modern axial piston pumps with low drive power
- New DENSITRONIC control system for tunnel adjustment provides for better response to various material grades.
- Modulare feeding concept
- The new Touch Panel TP 700 facilitates the operation of the machine through recipe management and a comprehensive display of data.

Latest state of the art according to the 2013 published European C standard for horizontal balers (EN 16252)

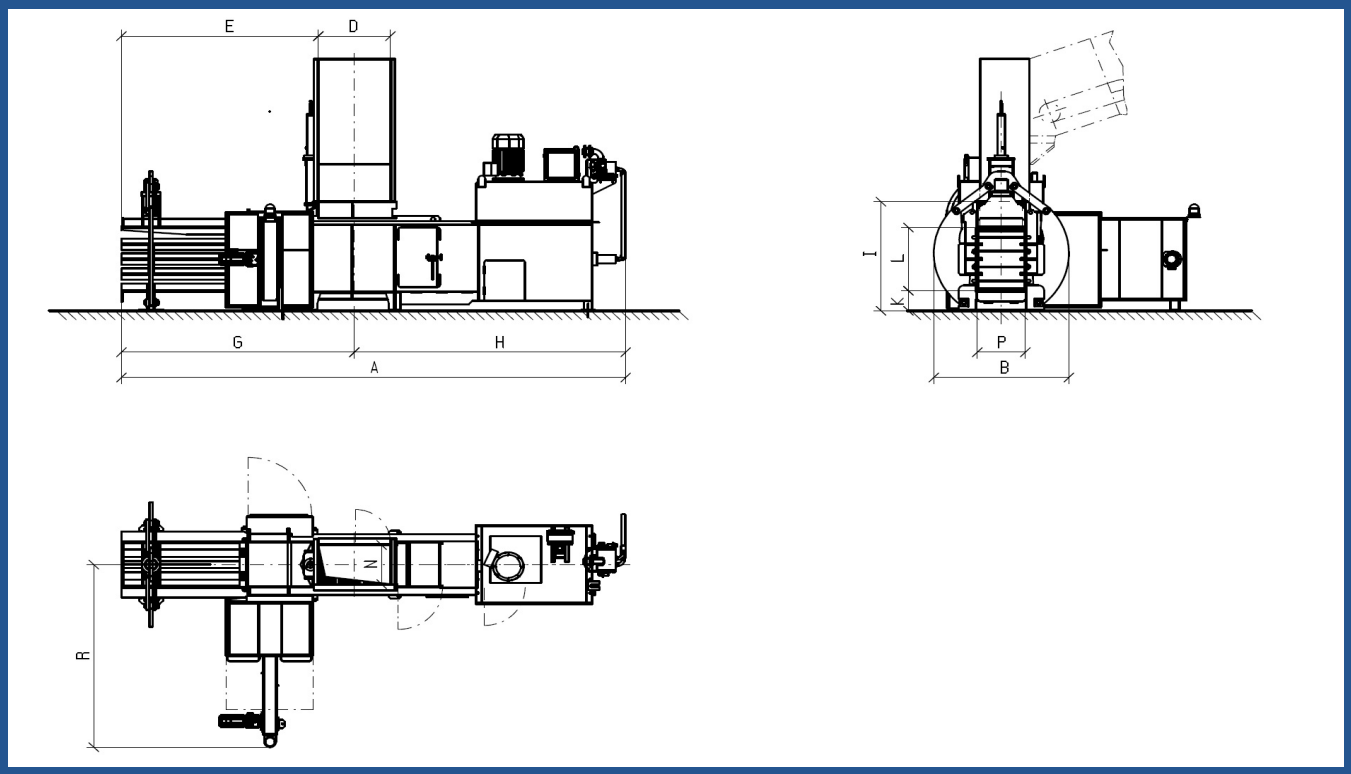

www.kadantpaal.com

Stand 12/16